


**RTU CONTROLLER · MODBUS RTU**

# 6Ai6Ro

6 Universal Inputs · 6 Relays · Modbus RTU

| | |
|---|---|
| **INPUTS** | 6 universal · digital, 0–10 V, 4–20 mA, NTC |
| **RELAYS** | 6 × Omron · 16 A @ 250 V AC |
| **BUS** | RS-485 Modbus RTU · up to 247 devices |
| **POWER** | 11–30 V DC · DIN-rail · –40 to +55 °C |

**1 Introduction** 4

1.1 Key features . . . 4

1.2 Typical applications . . . 4

**2 Safety** 5

2.1 General safety guidelines . . . 5

2.2 Electrical installation safety . . . 5

2.3 Handling, storage & environment . . . 6

**3 Quick Start** 6

**4 Specifications** 6

4.1 Electrical . . . 6

4.2 Inputs & outputs . . . 7

4.3 Communication . . . 7

4.4 Processor . . . 8

4.5 Mechanical . . . 8

4.6 Environmental & certifications . . . 9

**5 How It Works** 9

5.1 Input channels . . . 9

5.2 Relay outputs . . . 10

5.3 Communication & power . . . 10

5.4 LEDs, buttons & rule engine . . . 10

**6 Installation** 10

**7 Configuration** 11

7.1 Quick setup via front-panel buttons . . . 11

7.2 Remote configuration (via Modbus) . . . 12

**8 Operation** 12

**9 Firmware Update** 12

**10 Troubleshooting** 12

10.1 Status & traffic LEDs . . . 12

10.2 Common problems . . . 13

**11 Maintenance** 13

**12 Warranty, Support & RMA** 14

12.1 Warranty conditions . . . 14

12.2 Warranty limitations . . . 14

12.3 Technical support . . . . . 14
12.4 RMA process (Return Material Authorization) . . . . . 14
**13 Compliance & Disposal** **15**
**Revision History** **15**

# 1 Introduction

The **FoxIoT 6Ai6Ro** is a DIN-rail Modbus RTU controller with **6 universal inputs** and **6 relay outputs**, built for reliable input monitoring and industrial switching. Each input reads digital signals, 0–10 V analog, a 10 kΩ NTC thermistor directly, or 4–20 mA with an external resistor, each output is a high-quality Omron relay rated 16 A. It communicates over RS-485 using Modbus RTU and integrates easily with PLCs, SCADA, and automation platforms.

A built-in **rule engine** runs internal automation independently of the Modbus master — switching relays on input changes, thermostat control, or analog-driven logic — so critical functions continue even if the communication link fails. Firmware updates are delivered in-field over Modbus, and a coil-voltage-reduction mode lowers power while relays are active. All input and communication pins are protected against wiring mistakes and voltage spikes (the RS-485 lines tolerate accidental connection of up to 30 V).

## 1.1 Key features

- 6 universal inputs (digital, 0–10 V analog, 10 kΩ NTC, 4–20 mA with resistor), 16-bit.
- 6 × Omron relays, 16 A @ 250 V AC, with coil-voltage-reduction mode.
- RS-485 Modbus RTU, 300–115200 bps, up to 247 devices.
- Built-in rule engine for standalone automation and safe fallback.
- Front-panel configuration, remote configuration over Modbus.
- Wide –40 to +55 °C range, protected I/O and bus pins.

## 1.2 Typical applications

- **Industrial automation** — monitor analog signals (temperature, pressure, voltage) and switch machinery or actuators.
- **Building automation (HVAC & lighting)** — thermostat rule logic and switch/sensor-driven lighting without external controllers.
- **Energy management & VPP** — local control with safe default state on loss of master communication.
- **Agriculture & greenhouses** — environmental monitoring and control of fans, heaters, or irrigation.
- **Remote / distributed sites** — local rules keep critical functions running when the network is unreliable.

> **About this manual.** This is the hardware product manual for the 6Ai6Ro — installation, configuration, and operation. For the full Modbus register definitions, communication examples, and rule configuration, see the Modbus Register Map.

### Related documents

| Document | Link |
|---|---|
| Datasheet / product overview | foxiot.eu/products/rtu-controllers/6ai6ro |
| Modbus Register Map | PDF · XLSX |
| Connection schematics (wiring) | PDF |

## 2 Safety

Read and understand this manual before installation or maintenance. The following guidance protects personnel and equipment.

### 2.1 General safety guidelines

- Only qualified personnel should install, wire, or service the device.
- Use appropriate personal protective equipment when working with electrical components.
- Do not operate the device if it appears damaged or has been exposed to moisture.
- Ensure all wiring and connections comply with local regulations and standards.
- Keep the working area clean and free of conductive materials.

### 2.2 Electrical installation safety

> **Electrical hazard — risk of severe injury or death.** Relay outputs may switch mains voltage (e.g. 230 V AC). A lethal shock is possible if terminals are touched during operation. **Always disconnect power before any installation or maintenance.** Mains wiring must be performed only by qualified personnel in accordance with local electrical regulations.

- **DIN-rail mounting** — ensure the controller is fully engaged on the rail inside an electrical cabinet, with the mounting clip locked to prevent movement.
- **Low-voltage wiring** — use appropriate low-voltage wire for power and inputs, do not route low- and high-voltage wiring together (may be prohibited locally).
- **Modbus data line** — use twisted-pair cable with controlled impedance (≈120 Ω) on the RS-485 lines to reduce interference.
- **Relay wiring** — use properly rated wiring, especially when switching high-voltage equipment.

#### Relay output limits

Each of the six relays is rated up to **250 V AC / 16 A (resistive)**. The 16 A rating applies to purely resistive loads — do not exceed rated voltage or current. Motors and inductive loads switch at lower usable current (e.g. 200,000 operations at 8 A, 250 V AC, $\cos\phi = 0.4$). High-inrush capacitive loads (LED drivers, power supplies) can weld contacts — use an inrush limiter or an external contactor rated for such loads. Isolate separate power sources to prevent cross-connection.

### 2.3 Handling, storage & environment

Handle with care to avoid mechanical shock. Do not press hard on the top-side buttons. Store in the original packaging in a clean, dry place within the rated temperature range. The device is for indoor cabinet use, outdoor installation is possible only inside a suitably rated weatherproof enclosure (IP65 or higher). Avoid excessive humidity/condensation, direct sunlight or radiant heat, and corrosive gases, dust, or vibration. For altitudes above 2000 m or non-standard environments, consult FoxIoT.

## 3 Quick Start

A minimal path to get the controller powered, addressed, and talking Modbus. **Read the Safety section first.**

1. **Mount** the unit on the DIN rail inside the cabinet, lock the clip.
2. **Wire power** — 11–30 V DC to the power terminals (observe polarity).
3. **Wire RS-485** — A (+) to master A (+), B (–) to master B (–), terminate the bus (≈120 Ω) if needed.
4. **Set the address & serial parameters** — power on, then within 10 s hold Buttons 1 + 2 to enter configuration mode (see §7).
5. **Verify communication** — the green Traffic LED blinks on valid Modbus activity. You are ready to read inputs and switch relays.

## 4 Specifications

### 4.1 Electrical

| Parameter | Value |
|---|---|
| Nominal voltage | 12 V or 24 V DC |
| Operating voltage range | 11–30 V DC |
| Idle power consumption | 0.35 W @ 12 V / 0.5 W @ 24 V |
| Power (all relays on, coil reduction enabled) | 1.8 W @ 12 V / 2.1 W @ 24 V |
| Power (all relays on, coil reduction disabled) | 3.0 W @ 12 V / 3.3 W @ 24 V |
| Reverse-voltage protection | Up to 30 V |

## 4.2 Inputs & outputs

| Parameter | Value |
|---|---|
| Inputs | 6 universal |
| Max input voltage | 30 V DC |
| Digital active / inactive range | 2.5–30 V / 0–1.5 V |
| Software debounce filter | 50 ms |
| Analog resolution / range | 16-bit / 0–10 V DC |
| Analog accuracy | ±0.1 % or ±3 mV (whichever greater), 0.05–10 V |
| Analog sampling rate / impedance | >100 Hz / >5 MΩ |
| Software pull-up | 10 kΩ @ 10 V (per input, software-enabled) |
| NTC mode | 10 kΩ thermistor, β = 3435 or β = 3977, connected directly |
| Relays | 6 × Omron G2RL-1-E (SPDT) |
| Relay rating | 250 V AC / 24 V DC, max 16 A |
| Mechanical life | 20 million operations |
| Electrical life | 30,000 ops @ 16 A 250 V AC, 200,000 ops @ 8 A 250 V AC (cosϕ 0.4) |
| Coil voltage reduction | Software-controlled |

## 4.3 Communication

| Parameter | Value |
|---|---|
| Interface | RS-485, Modbus RTU slave |
| Baud rates | 300 / 600 / 1200 / 2400 / 4800 / 9600 / 19200 / 38400 / 57600 / 115200 |
| Data format | 8N1 / 8N2 / 8E1 / 8O1 |
| Modbus address (via Modbus / buttons) | 1–247 / 1–62 |
| Bus pin protection / ESD | ±30 V / ±16 kV HBM |
| Fail-safe receiver | Open-circuit, short-circuit, idle-bus |
| Network capacity | Up to 247 devices |
| Common-mode range | –20 V to +25 V |

## 4.4 Processor

| Parameter | Value |
|---|---|
| Type | 32-bit ARM Cortex-M33 |
| Clock | Up to 76.8 MHz |

## 4.5 Mechanical

| Parameter | Value |
|---|---|
| Mounting | DIN-rail (TH35) |
| Module size | 6M (6 × 17.5 mm slots) |
| Dimensions (L × W × H) | 106 × 98 × 58 mm |
| Weight | 265 g |
| Connectors | Pluggable terminal blocks: 2×6-pin & 2×4-pin (≤1.5 mm²), 1×2-pin power & 6×3-pin relay (≤2.5 mm²) |

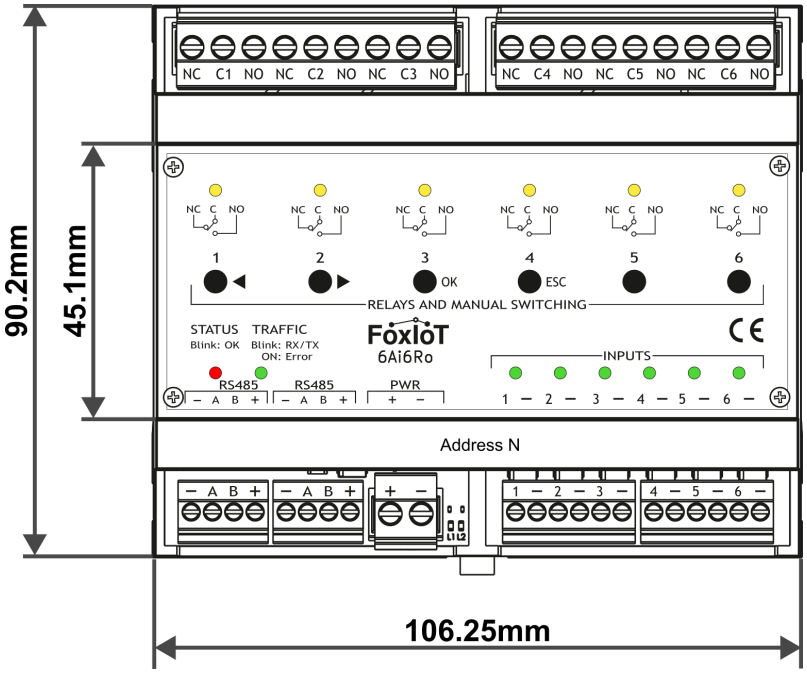


*6Ai6Ro front panel and dimensions (mm)*

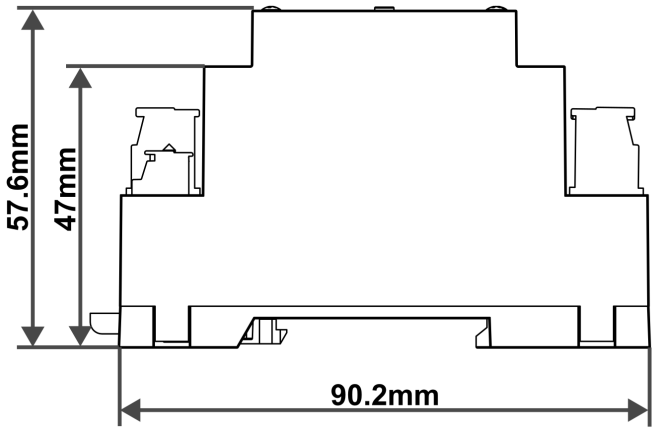


*6Ai6Ro side view dimensions (mm)*

### 4.6 Environmental & certifications

| Parameter | Value |
|---|---|
| Operating temperature | –40 to +55 °C |
| Storage temperature | –40 to +60 °C |
| Relative humidity | <90 %, non-condensing |
| Altitude | Up to 2000 m |
| CE compliance | 2014/30/EU (EMC), 2014/35/EU (LVD) |

## 5 How It Works

### 5.1 Input channels

The 6 universal inputs each read digital levels and 0–10 V analog — a single input can be monitored as both a voltage and a digital state without reconfiguration. The mode is set per input over Modbus:

- **Digital (dry contact)** — a software-controlled 10 kΩ pull-up to a precise 10 V source detects potential-free contacts, switches, and open-collector outputs, debounce filtering ensures stable recognition.
- **Analog 0–10 V** — pull-up off, for transmitters and other analog sensors.
- **4–20 mA** — pull-up off, with an external resistor between the input and ground: 250 Ω gives 1–5 V, 500 Ω gives 2–10 V.
- **NTC temperature** — a 10 kΩ thermistor (β = 3435 or β = 3977) connects directly between the input and ground, no external resistor. The controller manages the pull-up during measurement and reports the temperature.

Maximum input voltage is 30 V DC.

### 5.2 Relay outputs

Six Omron SPDT relays switch resistive, motor/inductive, and (with care) capacitive loads up to 16 A. A coil-voltage-reduction mode lowers power while a relay is held on.

### 5.3 Communication & power

A single RS-485 port speaks Modbus RTU as a slave to PLCs, SCADA, or a gateway. The device is powered from 11–30 V DC with reverse-voltage protection.

### 5.4 LEDs, buttons & rule engine

Front-panel LEDs show relay status (6 yellow), input status (6 green), device status (1 red), and Modbus traffic (1 green).

The six **buttons** are used for on-site configuration at start-up (§7) and, in normal operation, for local relay control. Their behaviour is set over Modbus:

- **Disabled** — buttons do nothing.
- **Enabled** (default) — each button toggles its relay.
- **Offline** — buttons toggle relays only when no Modbus master has queried the controller for 60 s.
- **Relay disable** — a button press switches its relay off and blocks Modbus control of it (relay LED flashes), a second press restores the relay. Cleared on reboot.

The built-in **rule engine** runs up to **8 rules** at the same time, locally and regardless of Modbus communication:

| Rule | What it does |
|---|---|
| Toggle relay | Each selected input toggles its own relay (toggle switch or push button) — typically lighting. |
| Flexible switch | Several inputs control several relays via bitmasks, with an optional countdown timer that switches off and is extended by new input events — room lighting and scenes. |
| Thermostat | Switches relays on the temperature from an NTC input, with setpoint, hysteresis, and heating or cooling mode. |
| Analog threshold | Like the thermostat, but compares the measured voltage — level or pressure thresholds. |

To change a rule, disable it, write the new parameters, and enable it again — changes take effect when the rule is re-enabled. Rule parameters and examples are in the Modbus Register Map.

## 6 Installation

1. **Unpack and inspect** the device for transport damage, check the model and ratings.
2. **Mount** on a TH35 DIN rail inside an electrical cabinet, engage the clip fully.
3. **Wire** inputs, relays, RS-485, and power using the pluggable terminal blocks.

For terminal assignments and wiring diagrams, see the Connection Schematics (Wiring Instructions).

> Disconnect all power before wiring. Do not route low- and high-voltage wiring together. Double-check polarity and that every connection is secure before powering on — loose connections can cause malfunction or damage.

# 7 Configuration

## 7.1 Quick setup via front-panel buttons

You can configure the **Modbus address, baud rate, and serial format** on-site with the front-panel buttons — no software needed.

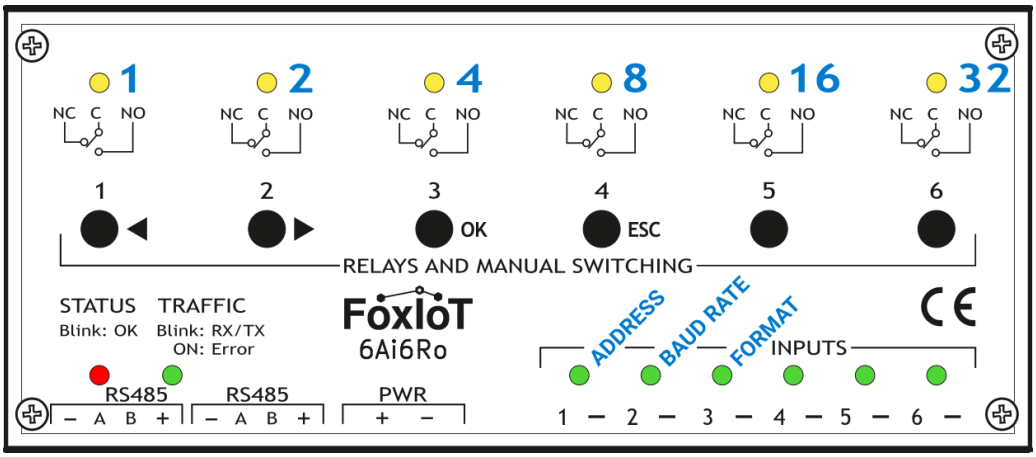


*6Ai6Ro front panel — buttons, status LEDs, and input LEDs (binary value per LED)*

**Enter configuration mode:** power off, power on, and **within 10 seconds press and hold Buttons 1 + 2** together. The Status and Traffic LEDs blink rapidly and Input LED 1 blinks slowly to confirm. A 60-second inactivity timer auto-exits and saves.

**Buttons:** 1 = ◄ move left / decrease · 2 = ► move right / increase · 3 = OK select/save · 4 = ESC quit/cancel.

**Menu LEDs:** Input LED 1 = address, LED 2 = baud rate, LED 3 = serial format. A **blinking** LED means you are navigating, a **solid** LED means that item is being edited. Values are shown in binary on the six output LEDs (LED 1=1, 2=2, 3=4, 4=8, 5=16, 6=32 — add the lit LEDs).

### Setting the Modbus address

Navigate until Input LED 1 blinks → **OK** (LED 1 solid) → use ◄/► to set the value (**1–62** from buttons, higher addresses via Modbus) → **OK** to save or **ESC** to cancel.

### Setting baud rate & serial format

Select LED 2 (baud) or LED 3 (format), press **OK**, choose with ◄/►, then **OK**:

- **Baud:** 1=300, 2=600, 3=1200, 4=2400, 5=4800, 6=9600, 7=19200, 8=38400, 9=57600, 10=115200 bps.
- **Format:** 1=8E1, 2=8N2, 3=8N1, 4=8O1.

Press **ESC** repeatedly until all LEDs stop blinking to exit and apply settings.

### 7.2 Remote configuration (via Modbus)

All parameters — input modes, relay control, rule definitions, and communication settings — can be read and written remotely over Modbus RTU, suitable for automated setup and bulk management. For the full register list, see the Modbus Register Map.

## 8 Operation

The 6Ai6Ro operates as a Modbus RTU slave over RS-485. All input/output data, configuration, and rule parameters are accessible via Modbus registers, so the controller integrates directly with PLCs, SCADA, and gateways. For complete register definitions, communication examples, and rule configuration, refer to the Modbus Register Map.

## 9 Firmware Update

The 6Ai6Ro supports in-field firmware updates over Modbus, allowing new features and fixes without physical access. Do not disconnect power or communication during an update. After updating, verify the firmware version via its Modbus register and confirm settings are unchanged. Update procedures are documented in the Modbus Register Map.

## 10 Troubleshooting

### 10.1 Status & traffic LEDs

| LED | State | Meaning |
|---|---|---|
| STATUS | Blinking | Normal operation — powered and running |
| STATUS | Off | No power, or device failed to start |
| TRAFFIC | Short blink (50 ms) | Valid Modbus packet received on the bus |
| TRAFFIC | Long blink (300 ms) | Controller responded to a request addressed to it |
| TRAFFIC | Solid on | Communication error — check baud, parity, A/B wiring |
| TRAFFIC | Off | No communication activity |

### 10.2 Common problems

| Problem | Likely cause | Action |
|---|---|---|
| No power | Supply disconnected, low voltage, or reversed polarity | Verify 11–30 V DC, correct polarity, within range |
| No communication | Wrong address / baud / format, A-B wiring | Match master settings, A(+)→A(+), B(–)→B(–), check bus termination |
| Digital input not detected | Pull-up off, or contact not closing | Enable the 10 kΩ pull-up (dry contact), verify the contact and ground reference |
| Analog reading wrong/unstable | Wrong input mode, pull-up on, wiring | Set input mode to disable pull-up, for 4–20 mA fit a 250/500 Ω resistor, use shielded cable |
| NTC temperature wrong/unstable | Wrong input mode or thermistor type, wiring | Set the NTC mode matching the thermistor (β 3435 or 3977), connect it between input and ground, avoid long unshielded cables |
| Relay does not switch | Wrong command or damaged relay | Write 1=ON / 0=OFF, if the output LED is on but no click, the relay may be damaged |
| Relay ignores button | Buttons disabled / remapped | Check button mode in the configuration registers |

## 11 Maintenance

> Disconnect all power sources — controller supply and any connected external circuits — before handling the device.

The device is designed for indoor cabinet use and needs minimal maintenance.

- **Cleaning** — wipe the enclosure with a dry or slightly damp lint-free cloth, no solvents or abrasives.
- **Connectors** — periodically inspect power and communication terminals, clean oxidation/debris with electronics-approved contact cleaner or compressed air.
- **Periodic inspection (every 12 months)** — check for mechanical damage, secure mounting, and loose/frayed cables, tighten terminals, verify LEDs and Modbus diagnostics, confirm the recommended firmware version.

**Do not open the enclosure** — there are no user-serviceable parts inside. Opening it voids the warranty.

# 12 Warranty, Support & RMA

## 12.1 Warranty conditions

FoxIoT OÜ provides a limited warranty for **36 months from the date of purchase**, covering defects in materials and workmanship under normal use, in accordance with this manual and the product's environmental specifications. During the warranty period FoxIoT will repair or replace defective units at no charge, provided the product has not been modified, misused, or subjected to adverse conditions.

- Valid only for original products from FoxIoT OÜ.
- Proof of purchase may be required.
- Warranty service is limited to repair or replacement.
- The warranty does not cover associated costs such as removal, reinstallation, or transportation.

Independent of the warranty period, FoxIoT provides security updates for at least **5 years** from the product's release, as required by EU CRA 2024/2847.

## 12.2 Warranty limitations

The warranty does **not** apply in the following cases:

- Physical damage from mishandling, impact, fire, or water exposure.
- Damage from improper installation, incorrect wiring, or operation outside the specified limits.
- Modifications or repairs by unauthorized personnel.
- Normal wear and tear.
- Software issues related to non-standard configurations.

> The warranty is void if the product has been opened or tampered with in any way not approved by FoxIoT OÜ.

## 12.3 Technical support

Contact our support team through:

| | |
|---|---|
| Email | support@foxiot.eu |
| Support hours | Monday–Friday, 10:00–16:00 EET (Estonian time) |
| Languages | English, Estonian |

Have your device's serial number, firmware version, and a clear description of the problem ready when contacting support.

## 12.4 RMA process (Return Material Authorization)

To return a product for repair or replacement you must obtain a valid **RMA number** from support — devices returned without one are not accepted.

1. Contact technical support to report the issue.
2. Provide the serial number, a clear description of the issue, and proof of purchase.
3. Receive an RMA number and return instructions.
4. Package the product carefully to prevent shipping damage and include the RMA number.
5. Send the unit to the return address provided by support.

Returns through an authorized reseller or distributor must still be submitted to FoxIoT support to obtain an RMA number. The reseller manages end-customer logistics and documentation. Direct end-customer returns are accepted after support verifies the purchase channel and warranty eligibility.

## 13 Compliance & Disposal

This product is designed and manufactured to comply with applicable EU directives and standards for industrial electronic equipment.

| Topic | Detail |
|---|---|
| CE — EMC | Directive 2014/30/EU (Electromagnetic Compatibility) |
| CE — Low Voltage | Directive 2014/35/EU (Low Voltage Directive) |
| RoHS | Directive 2011/65/EU (restriction of hazardous substances) |
| WEEE | Directive 2012/19/EU (waste electrical & electronic equipment) |

> **Disposal (WEEE).** Do not dispose of this device with household waste. At end of life, return it to a designated WEEE collection point or to FoxIoT OÜ for proper recycling — see recycling & disposal. The crossed-out wheeled-bin symbol indicates separate collection within the EU.

For declarations of conformity and the latest compliance documents, contact support@foxiot.eu or see foxiot.eu.

## Revision History

| Version | Date | Notes |
|---|---|---|
| 1.2 | 2026-11-13 | Input status LED colour corrected to green. |
| 1.1 | 2026-09-30 | Relay DC rating corrected to 24 V DC (Omron G2RL-1-E rated load 16 A @ 24 V DC). NTC input mode, rule engine, and button modes described; related-document links corrected. |
| 1.0 | 2026-06-02 | Initial release. |